EIA158-90EL

1-5/8" EIA flanged right-angle adaptor

For 1-5/8" rigid line or 1-5/8" coaxial cable

In-stock
Ready to
Ship

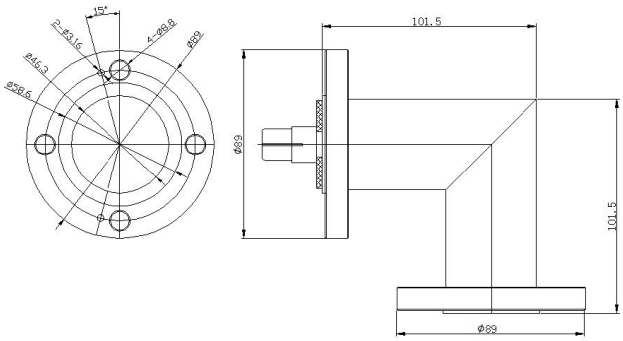

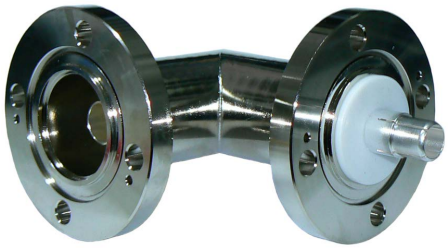

Interface	According to IEC 60339-2	
Frequency range	DC - 3 GHz	
VSWR	1.10 @ DC-1.0 GHz	
Impedance	50 Ohm	
Dielectric withstanding voltage	≥6000V rms, 50Hz, at sea level	
Working voltage	≤2100V RMS, 50Hz, at sea level	
Dielectric resistance	≥5000MΩ	
Peak power	90 Kilowatts - maximum	Average: 3.4kW at 900 MHz
Contact resistance	Centre contact - ≤1.5mΩ Outer contact - ≤1.5mΩ	
Durability	≥100 mating cycles	
Operating temp range	-40°C to + 85°C	
RoHS compliant	Yes	
Weatherproof rating	IP67	

Construction	
Body	Nickel (Ni) plated brass
Insulator	PTFE (teflon)
Centre conductor	Silver (Ag) plated phosphor bronze
Flange nut	Nickel (Ni) plated brass
Gasket	Silicon rubber
Bolts and washers	304 stainless steel